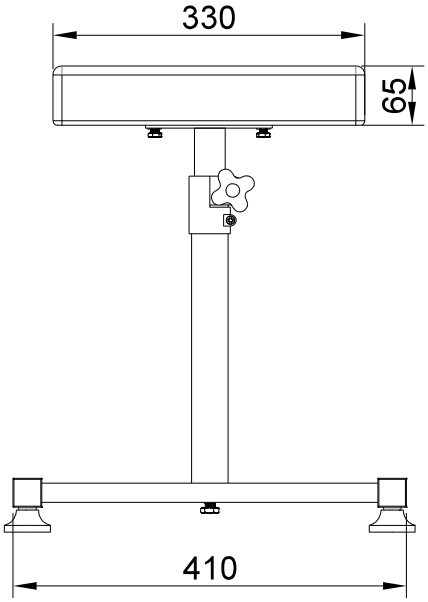

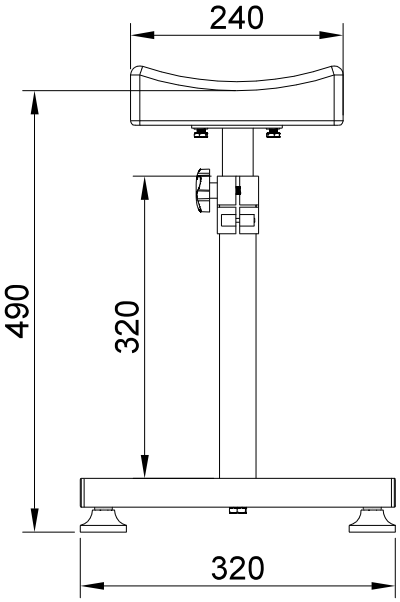

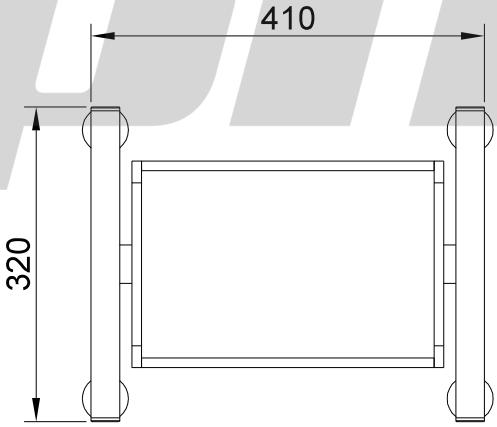

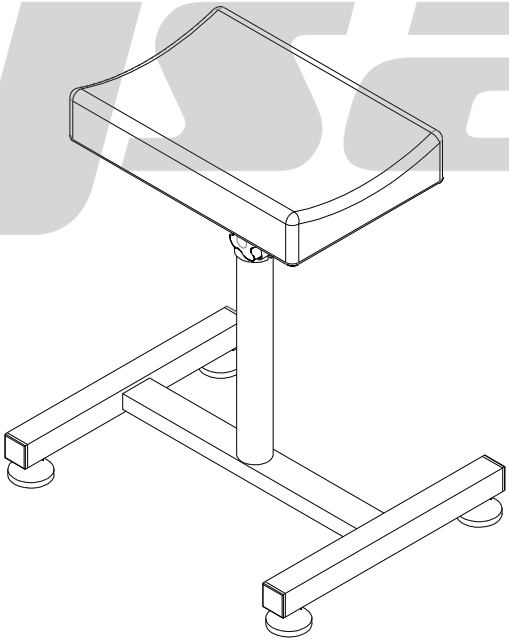

physa	Leg support Item number: 10040171	25.04.2018	Scale: 1:8 Unit: mm	Page: 1/1